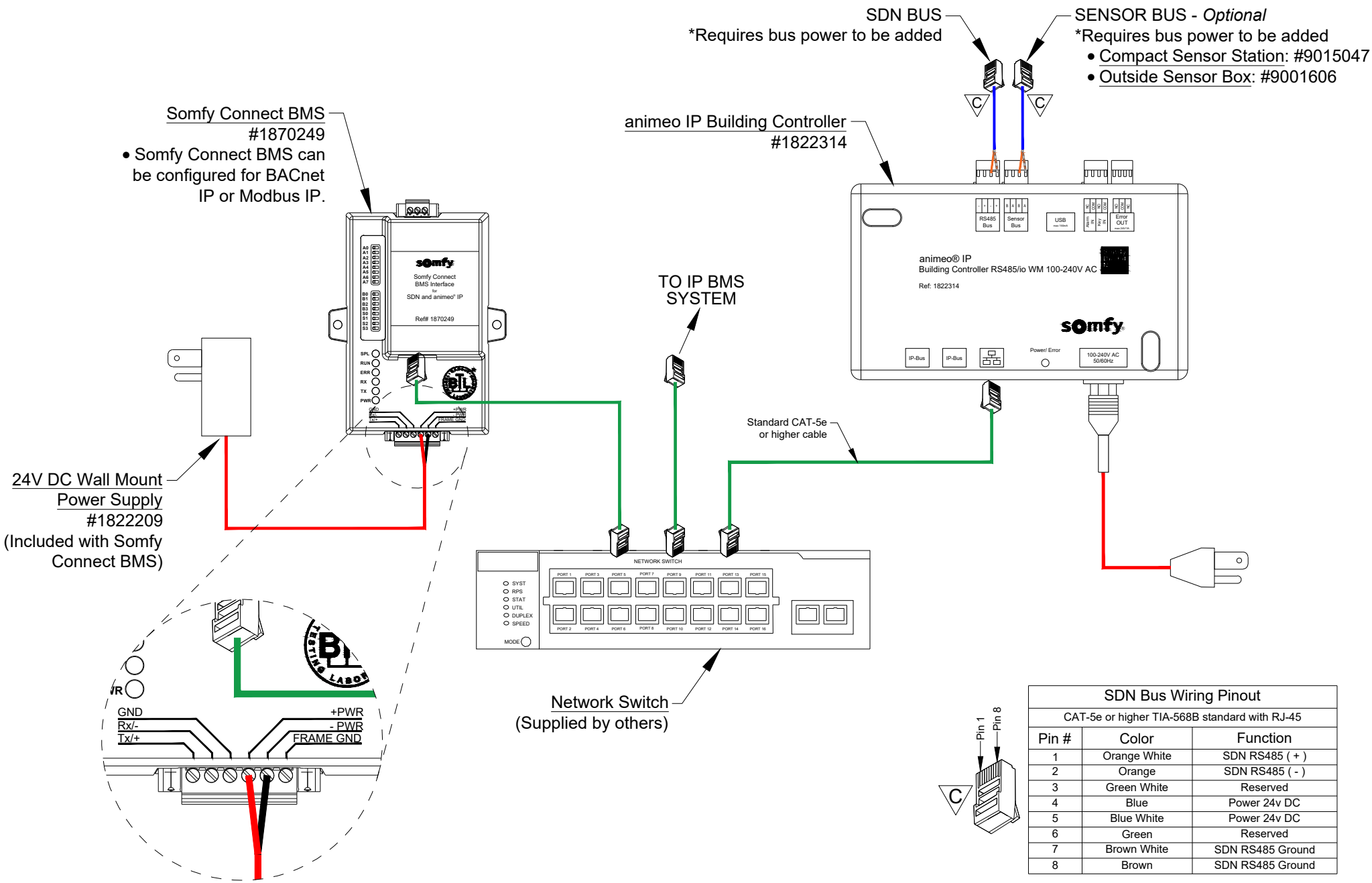

SDN Bus Wiring Pinout		
CAT-5e or higher TIA-568B standard with RJ-45		
Pin #	Color	Function
1	Orange White	SDN RS485 (+)
2	Orange	SDN RS485 (-)
3	Green White	Reserved
4	Blue	Power 24v DC
5	Blue White	Power 24v DC
6	Green	Reserved
7	Brown White	SDN RS485 Ground
8	Brown	SDN RS485 Ground

© 2015 Somfy Systems, Inc. All Rights Reserved. This drawing is the property of Somfy Systems, Inc.. The graphics, information and specific ideas in this document are the exclusive property of Somfy Systems, Inc. and must not be made public, copied, or sold. Others seeking permission to reproduce this document, in whole or in part, must obtain permission from Somfy Systems, Inc. in writing.

Tel: 1-800-64-SOMFY
Fax: 1-609-495-8165
www.somfysystems.com

Date:	11/05/18
Print Size:	8.5" x 11"
Scale:	NTS
Sales:	N/A
Drawn by:	RV
Checked by:	PK

Revisions

Rev	Date	By	Description
-	--/--/--	-	
-	--/--/--	-	
-	--/--/--	-	
-	--/--/--	-	
-	--/--/--	-	

Dwg Title: Somfy Connect BMS to IP for animeo IP Wire Detail

Dwg No.: BMS-WIRING-03

Project name: Technical Library

Client: Somfy Systems, Inc.

Address: 121 Herrod Boulevard, Dayton, NJ 08810